Cavway X1 User Manual

March 2026 Rev. C

Corresponding Firmware 1.1.6

Siwei Tian & Marco Corvi

The Cavway X1 is an integrated electronic device for cave surveying. It has the following features:

- Good ergonomic:
  145g weight and 131*55*33 mm size
- High Accuracy (after proper calibration):
  Distance < 5mm
  Azimuth ~ 0.4° or better
  Inclination ~ 0.2°
- IP67 Waterproof and floatable
- Screw holes for tripod mounting, and for a tail.
- USB-C port supporting charging and data transfer.
- Two pairs of triaxial G and M sensors.
- On-board standalone smart calibration.
- Robust anti calibration loss and magnetic interference detection.

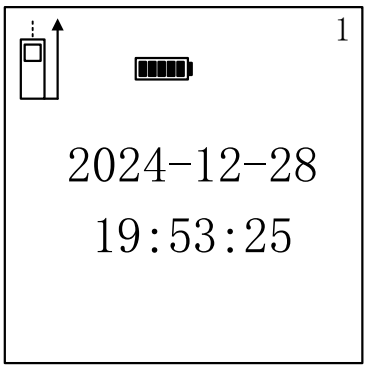

There are five buttons:

- Measure: “DIST”
- Left: “<”
- Right: “>”
- Menu / Enter: “M”
- Clear / Off: “CLR”

Power on/off

A press on the top button, "DIST", turns the device on. The display shows the date and the time. A long press on the CLR button switches the Cavway X1 off.

To lock and power off the device, press and hold the CLR button while simultaneously pressing the > key. To unlock upon restart, press the M key within 2 seconds.

Measure

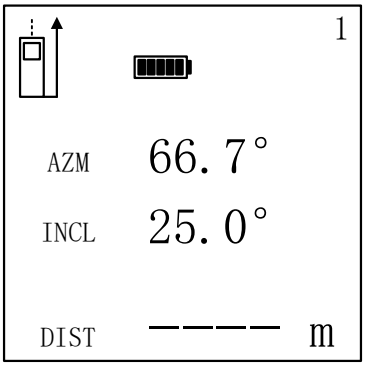

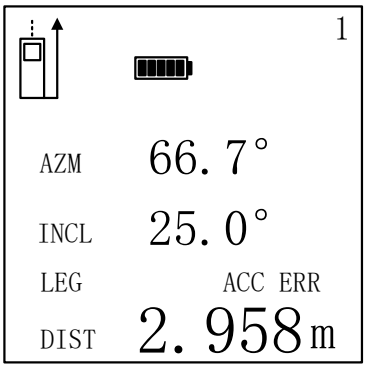

Pressing the "DIST" button, the laser turns on and the display shows azimuth and inclination. Pressing it another time the shot measurement is taken: a beep is emitted and the shot data are stored in memory. **Press and hold the DIST button for 2 seconds to trigger a delayed measurement.** The delay time (in seconds) can be set in a menu. If the device detects an error, there is an error warning “ACC ERR” on the display and the beep lasts longer. Whenever three or more consecutive close shots are taken the Cavway X1 emits a double beep and flashes the screen. The word “LEG” is shown on the screen. If “ACC ERR” appears frequently and there is no magnetic interference, check your calibration.

After the measurement is completed, use the < and > keys

to view further information associated with the measurement. Available results include error messages and horizontal/vertical components. The error message displays detailed information about sensor accuracy errors. When the "ACC ERROR" prompt appears, this page provides specific details. The horizontal/vertical components page shows the tilt angle of the current measurement, as well as the lengths of the vertical and horizontal projections.

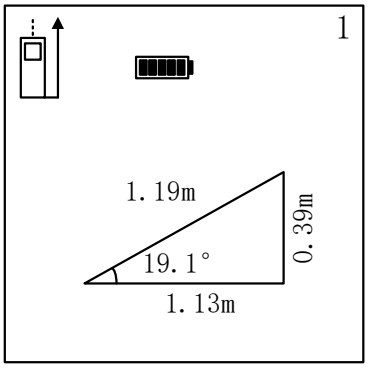

Hotkey:

Long press “>” opens a confirmation dialog to clear the transfer flag of unsent shots.

Special shot marking

In measurement mode, pressing the “M” button while the laser is on allows the Cavway X1 to assign a special mark to the shot (leg or splay). The corresponding mark will be displayed on the screen. The five available marks are:

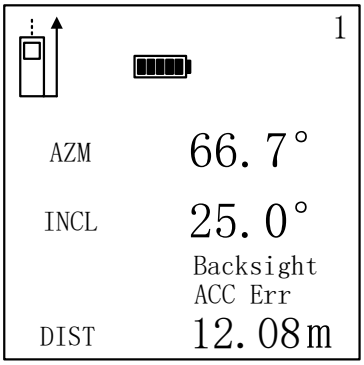

- No Mark
- Feature
- Ridge
- Backsight
- Generic

Pressing “M” button repeatedly cycles through these values.

Scan mode

In measurement mode, press and hold the DIST+M key or the > key for 2 seconds (choose one of the two methods; this can be set in the menu) to enter scan mode. Once in scan mode, the screen will display “SCAN MODE” along with the number of shots already scanned. At this point, the laser will remain continuously on instead of turning off after a single shot, allowing the user to move the device and automatically complete continuous measurements. When recording a measurement shot, the device needs to be held steady for a quick moment; it will automatically detect stability and complete the shot. The scan speed can be set in the menu, with three options available: low, medium, and high. Higher speeds correspond to lower accuracy. Pressing the CLR key, reaching the scan time set in the menu, or completing 200 measurement points will exit scan mode and return to normal measurement mode.

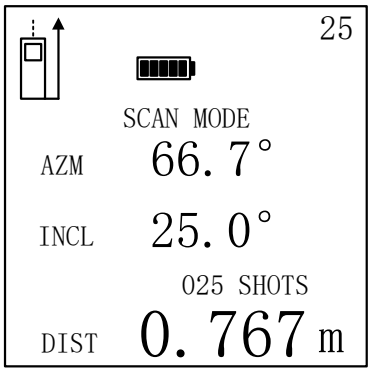

Memory mode

SHOT # 1

	DIST	AZM°	INCL°
	2.95	66.7	24.6
E	5.26	163.8	22.2*
E	1.58	293.0	7.3_
C	0.00	294.7	8.3
C	0.00	297.5	7.6

Pressing the "<" or the ">" button the Cavway X1 enters the memory mode: data in memory are shown on the display. The most recent data on the top. It is possible to scroll up ("<" button - more recent data) and down (">" button - older data) in the list.

The character 'E' on the left indicates a data with accuracy error. The character 'C' denotes a calibration data. The character 'S' denotes a scan shot data. The lines in bold indicate a leg. The data that have not been transferred have a '*' on the right. Data with special marks are indicated with "_". Pressing "M" button enters the shot detail page.

On the shot detail page, the "M" button cycles through the info of the highlighted data: readings, errors, HV components, and G/M/dip values. The "<" and ">" buttons move to the previous and next shot in memory, respectively, without changing info-page.

SHOT # 1 *
DIST: 1.19m Q: 5
AZM: 23.5°
INCL: 19.1°
2024-12-18 20:33
Accuracy Error
< >:Prev/Next shot
M:Next page (1/4)

SHOT # 1 *

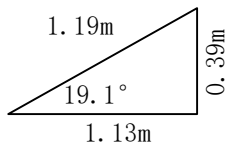

< >:Prev/Next shot
M:Next page (2/4)

SHOT # 1 *
absM Error
absM1: 0.9822
absM2: 1.0284
Dip Error
Err1: 1.9°
Err2: 0.9°
< >:Prev/Next shot
M:Next page (3/4)

SHOT # 1 F *

absG: 0.988g
absM: 53.74uT
Dip: 56.9°
Mark:Backsight
< >:Prev/Next shot
M:Next page (4/4)

Menu mode

Calibration
Clr. Unsent
Options
Information
Advan. Menu
< >:Prev/Next
M:Enter

Pressing the "M" button opens the configuration menu of the Cavway X1:

- Calibration
- Clr. Unsent
- Options
- Information
- Advan. Menu

The "<" and ">" buttons move through the choices. You

select a choice with the "M" button. A press of the "CLR" button returns to normal mode.

Calibration

With this menu the device enters the calibration mode, which is used to calibrate the Cavway X1.

Clr. Unsent

This menu clears the flag of the data that have not been transmitted yet. There is a confirmation question.

```
Clear unsent
Shots?

M:Confirm
CLR:Cancel
```

Options

The options are (bold values are the default)

- Reference (**rear**, tail, tripod, front, custom)
- Shot Delay (from **0** to 9 second)
- Backlight (0 to **10**; 0 no backlight, 10 max brightness)
- Beep (**ON** or OFF)
- Idle time-off (**60**, 120, 180, 240, 300 seconds)

```
> Ref.          Rear
  Shot delay:     0s
  Backlight:      10
  Beep:           ON
  IdleOff:       60s

< >:Prev/Next
M:Adjust  CLR:Back
```

The "<" and ">" buttons move through the options. The value of each setting is adjusted with the "M" button, cycling through the available values. The "CLR" button goes back to the main menu.

The possible values for the reference are

- Rear: the distance is measured from the rear end of the instrument
- Tail: the distance is measured from the tail on the rear of the instrument.
- Front: the distance is measured from the front end of the instrument
- Tripod: the distance is measured from the point of attach of a tripod. The laser axis is 18.6 mm above the center of the tripod screw hole.
- Custom: this choice is for a custom tail. The laser reading is taken from the rear end of the instrument, but the distance has an additional value specified (in mm). For instance, is the custom value is 20 mm and the reading is 1 m the distance is 1.02 m.

The backlight of the display changes accordingly to the setting while it is adjusted. The value '0' is a completely dark screen.

Information

The information has two pages. The first page displays the hardware version, the firmware version, Bluetooth module firmware version, the serial number, and the battery charge. Cavway X1 adopt a 1800mAh non-magnetic battery, which is three times that of the DistoX2.

The second page displays the calibration information such as calibration time, average error, error's stddev, max error and calibration place's dip angle. If the device has not been calibrated, "NO CALI INFORMATION" will be displayed.

```
CAVWAY X1
Hardware: 1.0
Firmware: 1.1.2
Ble ver.:0.4.0
Serial:   0001
Battery:  4.00V
M:NEXT CLR:Back
```

```
Sensor 1
Time:      2026-03-22
             08:39:22
Aver. Err.:      0.15
Err stddev:      0.28
Max Err.:        0.37
Dip:            59.30
M:NEXT CLR:Back
```

Advanced Menu

```
Shot Options
Scan Options
Cal. Options
Time
Units
< >:Prev/Next    (1/7)
M:Enter  CLR:Back
```

The advanced menu has

- Shot options
- Scan options
- Calibration options
- Time
- Units
- BLE options
- Factory reset

Shot options

```
> Err Detect:      ON
  Angle Diff:    0.4°
  ABS Lim:       1.0%
  dip Lim:       1.0°
  Reset Default
  Reset Statistic
< >:Prev/Next
M:Adjust  CLR:Back
```

The shot accuracy options are (bold values are the default):

- Error detection (**ON** or OFF)
- Angle difference (0.2, 0.3, **0.4**, 0.5, 0.6, 1.0 degrees)
- absG and absM error limit (0.5, 0.8, **1.0**, 1.5, 2.0, 3.0 percent)
- Dip error limit (0.5, 0.8, **1.0**, 1.5, 2.0, 3.0 degrees)
- Reset to default values
- Reset the statistics

The angle difference is the difference between the device directions measured by the two pairs of G-M sensors. The absolute (ABS) error limit refers to the maximum deviation between the magnetic field intensity and gravitational acceleration magnitude obtained by two sets of G-M sensors relative to their mean values. The dip limit is the difference between the G-M angles measured by the two pairs of GM sensors.

```
> Enable:        ON
  Speed:        Med.
  Trigger:    DIST+M
  Scan:        2 Min

< >:Prev/Next
M:Adjust  CLR:Back
```

Scan options

The scan options are (bold values are the default):

- Enable (**ON** or OFF)
- Speed (Low, **Medium**, High)
- Trigger (**DIST+M**, >)

- Scan (1, **2**, 5, 10 Min)

The speed option determines the scanning speed and scanning accuracy. When set to high, the device records shots quickly, but the accuracy is poor. When set to low, the device needs to remain steady for a short while for each shot scanned. The trigger method is the key operation used to enter scan mode; currently, two key operation methods are provided. The scan option sets the maximum duration for each scan.

Calibration options

```
> Err Detect:     ON
  Grp Limit:      3%

< >:Prev/Next
M:Adjust  CLR:Back
```

The calibration options are (bold values are the default)

- Error detection (**ON** or OFF)
- Group limit angle (1, **3**, 4, 5, 6, 8, 10 percent)

The group limit angle is the threshold for the automatic detection of the shots of a group. The Cavway X1 automatically detects when the user starts a new group after completing one. To complete a group the user must take four or more shots in the same direction, rotating the device by 90 degrees each time. If more than four shots are taken only the last four are considered for the group. When a group is completed the Cavway X1 emits a double beep.

Time

```
> Year:          2024
  Month:           12
  Day:             18
  Hour:            22
  Min:             21
  Sec:             55
< >:Adjust
M:Next   CLR:Save
```

With the time menu the user can set year, month, day, hour, minute, and seconds. The values are adjusted with the "<" and ">" buttons. The "M" button moves to the next value: from "year" to "month", from "month" to "day" and so on. After "seconds" it goes back to "year". The "Back" (CLR) button saves the time.

Units

```
> Distance:          m
  Angle:           deg

< >:Prev/Next
M:Ad.just  CLR:Back
```

The units options are (bold values are the default)

- Length (**m** or ft)
- Angle (**deg** or grad)

"Grad" is the abbreviation for Gradian (or Grade), a unit of angular measurement representing the 400 gon system.

BLE options

```
> Force Pair:      OFF

M:Ad.just  CLR:Back
```

The only BLE option is Force pair, with a default value of OFF. When this switch is turned on, the phone must be paired to connect to the device. When the switch is off, pairing is not recommended in the Android system. It is recommended to use the Bluetooth scanning function within the App to discover and connect to the device (Topodrod).

Calibration

The Cavway X1 utilizes the same calibration method as the Disto X2/XBLE, with additional features for calibration assistance and error detection. Notably, the Cavway X1 can be calibrated independently without the need for an app on smartphones or tablets. To initiate calibration mode, navigate to the menu and select "Calibration".

Calibration process

Calibration involves taking groups of four shots that cover all directions. During each group:

1. Fix the rear of the instrument at point A and point the laser beam on point B.
2. Take the first calibration shot, then rotate the device by 90 degrees and take the next shot.
3. Repeat until four shots are taken.

While the distance between points A and B is not recorded, it is recommended that it exceeds 5 meters for optimal accuracy. After completing one group of shots, change to a new direction and begin a new group.

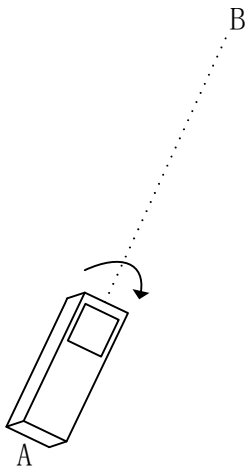

Display features

The display provides a visual map of the 3D directions covered by the calibration groups. Two circles represent the upward and downward hemispheres. The directions that are "covered" by the calibration shots are dark. The directions of the groups already taken are shown with a 'x' and that of the group that is being taken with a '+'. A good calibration should darken both circles entirely, requiring at least 14 groups of shots.

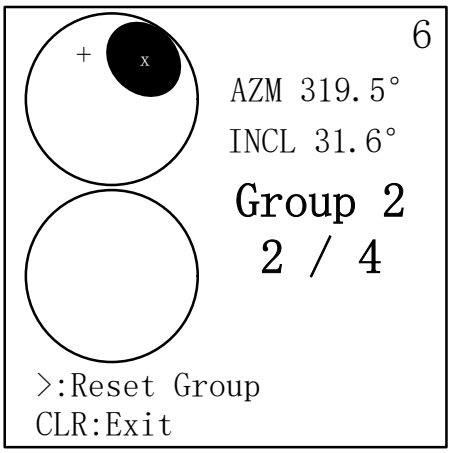

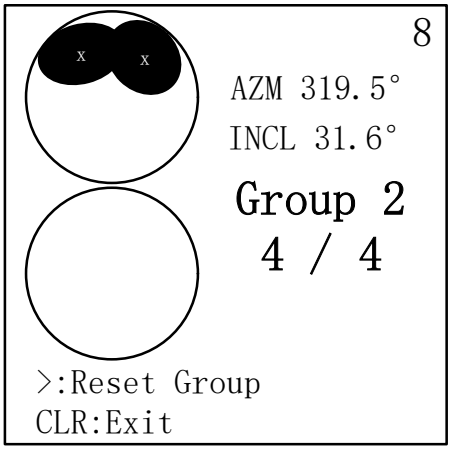

Group Management

The display also shows:

- The total number of groups completed.
- The number of shots in the current group.

When a group contains four valid shots, it is complete and it is stored when a new group is started, or before the computation of the calibration. If more than four shots are taken, only the last four are considered. If an error occurs taking a shot, the group can be reset (i.e., all

shots cleared) by pressing the “>” button. If a shot deviates significantly from the previous shots, a new group is started with that shot. If the previous shots do not form a complete group, they are discarded.
There is a limit of 25 groups. When the limit is reached no more groups can be taken.

Calibration Coefficients Computation and Reporting

When more than eight complete groups have been captured, the calibration process can be computed by pressing the "M" button. This action generates a detailed calibration report for each sensor pair, which includes:

- Average Error: The mean angular error across the shots in the group.
- Standard Deviation: A measure of the variability in the angular errors.
- Maximum Error: The largest observed angular error.

The error of a shot is defined as the angular difference between the recorded data and the average direction of the shot group after the calibration is applied.
The report also provides:

- The number of iterations performed during the computation.
- The angle between the gravitational direction (G) and the magnetic direction (M), ("magnetic dip.")

The raw data from calibration shots can be viewed in the memory dialog for further analysis or review.
After the calibration coefficients are computed, the user has the option to:

1. Apply the Coefficients: Press the "M" button to put the computed calibration into use.
2. Discard the Coefficients: Press the "CLR" button to discard the calibration and return to the main calibration interface.

After discarding or applying the calibration, users can choose to continue capturing additional groups of shots to further refine the process.

```
        Sensor 1
Aver. Error:     0.25°
Err Stddev:      0.28°
Max Err:         1.28°
Iterations:        36
Magn. Dip:      57.30°

<>:Scroll report
M:Apply CLR:Exit
```

```
Calibration
Updated
```

Firmware upgrade

WARNING: All data stored will be erased during firmware upgrades including the calibration and history data.

The upload of a new firmware can be done with the Windows program Cavway Assistant.

- Open the Cavway Assistant on the PC
- Connect the Cavway X1 to the PC with a USB cable, with the Cavway X1 off
- Turn on the Cavway X1 in boot mode: press the '<' and '>' buttons simultaneously, hold them and press the 'DIST' button.
- Click the 'Connect' button on the Cavway Assistant. You might have to click it a few times before the program is connected to the Cavway, and the button displays "Disconnect".
- When the program shows that it is connected to the Cavway X1, click the 'Firmware' button. In the coming dialog you can open a firmware file from the PC or use the file bundled in the program.
- Press the 'Upgrade' button and wait for the upload to finish. The firmware upload process is shown also on the Cavway X1 display.
- When finished the Cavway Assistant reports whether the upload was complete ("Success") or not. A successful message also shown on the Cavway X1 display.
- After the program shows "Success" shutdown the Cavway X1 pressing and holding the 'CLR' button.
- Turn it on in normal mode by pressing the 'DIST' button.

BOOT MODE	BOOT MODE UPGRADING... 105	BOOT MODE UPGRADE SUCCESS

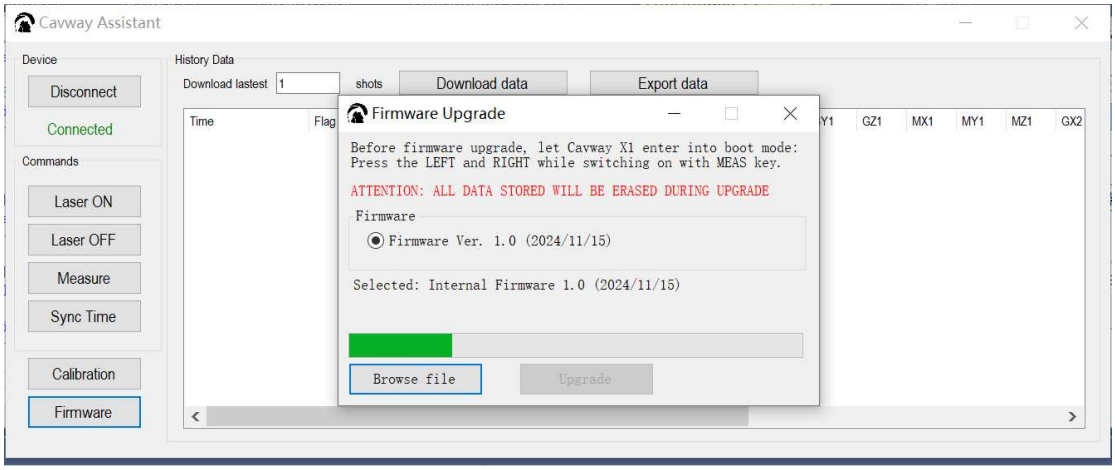

Cavway Assistant

All history data stored can be downloaded by Cavway Assistant. The downloaded data are shown in a form including the Distance, Azimuth, Inclinations, absG, absM, dip and the RAW data of 2 sets of sensors. By “Export data” button, the data can be export to csv format.

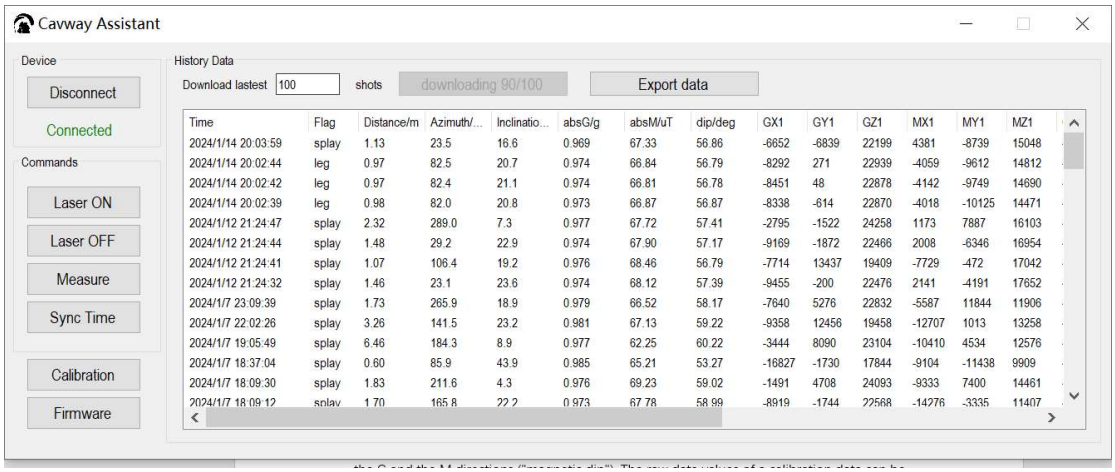

Time	Flag	Distance/m	Azimuth/...	Inclinatio...	absG/g	absM/uT	dip/deg	GX1	GY1	GZ1	MX1	MY1	MZ1
2024/1/14 20:03:59	splay	1.13	23.5	16.6	0.969	67.33	56.86	-6652	-6839	22199	4381	-8739	15048
2024/1/14 20:02:44	leg	0.97	82.5	20.7	0.974	66.84	56.79	-8292	271	22939	-4059	-9612	14812
2024/1/14 20:02:42	leg	0.97	82.4	21.1	0.974	66.81	56.78	-8451	48	22878	-4142	-9749	14690
2024/1/14 20:02:39	leg	0.98	82.0	20.8	0.973	66.87	56.87	-8338	-614	22870	-4018	-10125	14471
2024/1/12 21:24:47	splay	2.32	289.0	7.3	0.977	67.72	57.41	-2795	-1522	24258	1173	7887	16103
2024/1/12 21:24:44	splay	1.48	29.2	22.9	0.974	67.90	57.17	-9169	-1872	22466	2008	-6346	16954
2024/1/12 21:24:41	splay	1.07	106.4	19.2	0.976	68.46	56.79	-7714	13437	19409	-7729	-472	17042
2024/1/12 21:24:32	splay	1.46	23.1	23.6	0.974	68.12	57.39	-9455	-200	22476	2141	-4191	17652
2024/1/7 23:09:39	splay	1.73	265.9	18.9	0.979	66.52	58.17	-7640	5276	22832	-5587	11844	11906
2024/1/7 22:02:26	splay	3.26	141.5	23.2	0.981	67.13	59.22	-9358	12456	19458	-12707	1013	13258
2024/1/7 19:05:49	splay	6.46	184.3	8.9	0.977	62.25	60.22	-3444	8090	23104	-10410	4534	12576
2024/1/7 18:37:04	splay	0.60	85.9	43.9	0.985	65.21	53.27	-16827	-1730	17844	-9104	-11438	9909
2024/1/7 18:09:30	splay	1.83	211.6	4.3	0.976	69.23	59.02	-1491	4708	24093	-9333	7400	14461
2024/1/7 18:09:12	splay	1.70	165.8	22.2	0.973	67.78	58.99	-8919	-1744	22568	-14276	-3335	11407

Calibration data can be downloaded and stored locally.
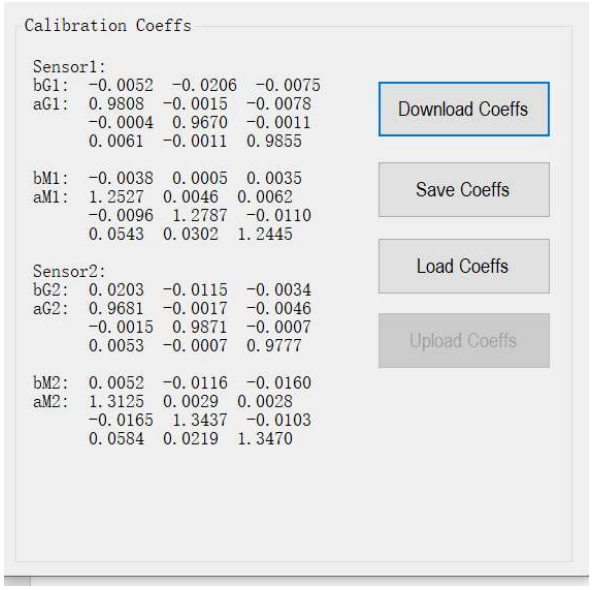
The “Download Coeffs” button downloads and displays the calibration coefficients parameters of the 2 sets of sensors. The “Save Coeffs” button stores them in local disk (.coe format). Calibration coefficients parameters can be loaded from local disk and uploaded to device, with the "Load Coeffs" and the "Upload Coeffs", respectively.